KOUHI

3mm Through Hole Lamps

KTL038

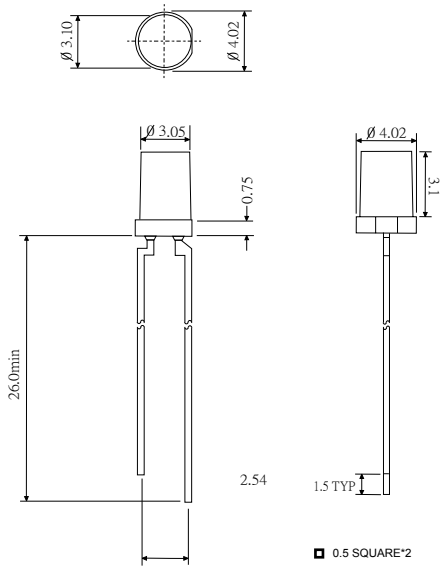

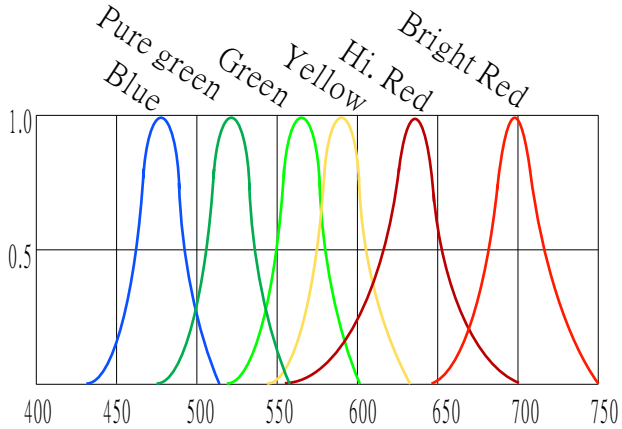

Fig. 1

Wavelength λ(nm)

Relative Intensity vs. Wavelength

Part no.	Colour	Wave Length	Lens Color (x)	Luminous Intensity (mcd)	Forward Voltage (V)	Forward Current (mA)	0°
KTL038DxI	Red	632		500	2.15	20	90
KTL038CxI	Red	632		1500	2.15	20	90
KTL038AxI-S	Red	632		2500	2.15	20	90
KTL038AxI-U	Red	632		5800	2.15	20	90
KTL038AxI-T	Red	632		7800	2.15	20	90
KTL038KxI	Green	565		500	2.15	20	90
KTL038JxI	Green	565		1500	2.15	20	90
KTL038JxI-S	Green	565		2500	2.15	20	90
KTL038JxI-U	Green	565		6000	3.60	20	90
KTL038IxI	Yellow	589		1300	2.15	20	90
KTL038IxI-S	Yellow	589		2500	2.15	20	90
KTL038IxI-U	Yellow	589		4500	2.15	20	90
KTL038IxI-T	Yellow	589	W- White	7500	2.15	20	90
KTL038FxI	Orange	621	D - Diffused	1500	2.30	20	90
KTL038FxI-S	Orange	621	C - Water Clear	2500	2.30	20	90
KTL038FxI-U	Orange	621	T - Transparent	3500	2.30	20	90
KTL038BGxI	Blue / Green	503		3500	3.60	20	90
KTL038BGxI-U	Blue / Green	503		6500	3.60	20	90
KTL038BLxI	Blue	470		500	3.60	20	90
KTL038BHxI	Blue	470		1600	3.60	20	90
KTL038BUxI	Blue	470		3500	3.60	20	90
KTL038PGxI	Pure Green	525		2500	3.60	20	90
KTL038PGxI-S	Pure Green	525		4000	3.60	20	90
KTL038PGxI-U	Pure Green	525		5500	3.60	20	90
KTL038WHxI	White	----		1300	3.60	20	90
KTL038WUxI	White	----		5200	3.60	20	90