KOUHI

8mm Through Hole-KTL080 Series

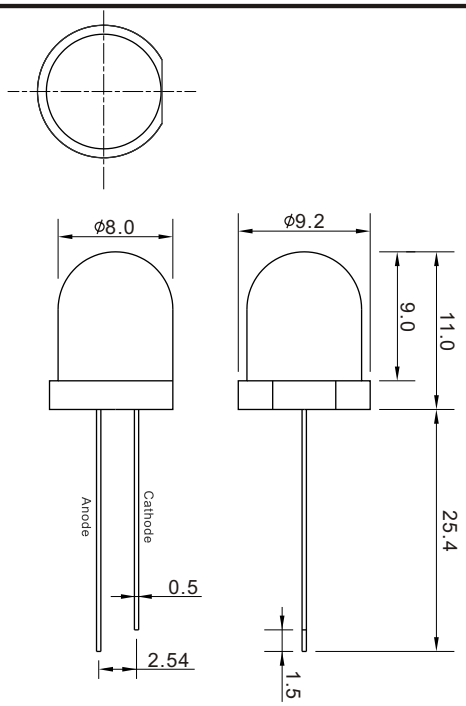

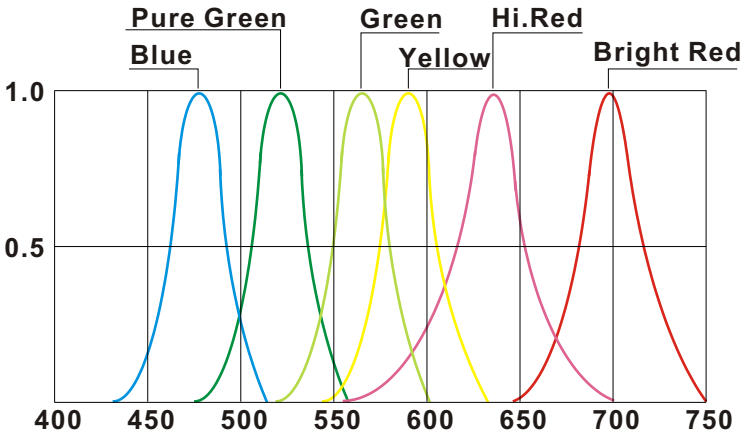

Relative Intensity vs.Wavelength

Part No.	Colour	Wave Length	Lens Colour	Luninous In tensity(mcd)	Voltage(V)	Current(mA)	Deg
KTL080DTI	Red	700	Red Transparent	10-20	1.7-2.4	20	25°
KTL080CTI	Red	645		80-200	1.7-2.4	20	25°
KTL080ATI-S	Red	630		1000-2000	1.7-2.4	20	25°
KTL080ATI-U	Red	640		2000-4000	1.7-2.4	20	25°
KTL080ATI-T	Red	623		3500-5500	1.7-2.4	20	25°
KTL080KTI	Green	572	Green Transparent	6-10	1.7-2.4	20	25°
KTL080JTI	Green	572		100-200	1.7-2.4	20	25°
KTL080JTI-S	Green	572		1000-2000	1.7-2.4	20	25°
KTL080JTI-U	Green	572		2000-3000	1.7-2.4	20	25°
KTL080ITI	Yellow	590	Yellow Transparent	1000-2000	1.8-2.1	20	25°
KTL080ITI-S	Yellow	590		1500-3000	1.8-2.1	20	25°
KTL080ITI-U	Yellow	590		3000-5000	1.8-2.1	20	25°
KTL080ITI-T	Yellow	590		5000-7000	1.8-2.1	20	25°
KTL080FTI	Orange	610	Orange Transparent	600-800	1.8-2.1	20	25°
KTL080FTI-S	Orange	610		2500-4500	1.8-2.1	20	25°
KTL080FTI-U	Orange	610		4500-6500	1.8-2.1	20	25°
KTL080BGTI	Blue-Green	510	Green Transparent	11000-13000	3.0-3.6	20	25°
KTL080BGTI-U	Blue-Green	510		13000-16000	3.0-3.6	20	25°
KTL080BLTI	Blue	470	Blue Transparent	3000-4000	3.0-3.6	20	25°
KTL080BHTI	Blue	470		4000-5000	3.0-3.6	20	25°
KTL080BUTI	Blue	470		5000-6000	3.0-3.6	20	25°
KTL080PGTI	Pure Green	525	Green Transparent	12000-14000	3.0-3.6	20	25°
KTL080PGTI-S	Pure Green	525		14000-16000	3.0-3.6	20	25°
KTL080PGTI-U	Pure Green	525		16000-18000	3.0-3.6	20	25°